MD KNOBS

Features

- Ergonomic and elegant design
- Wide range symbol type available
- Soft touch feeling
- Different colors are available
- 2K injection Technology
- Ø16 & Ø20 body hole options

Rustless | Patent Pending
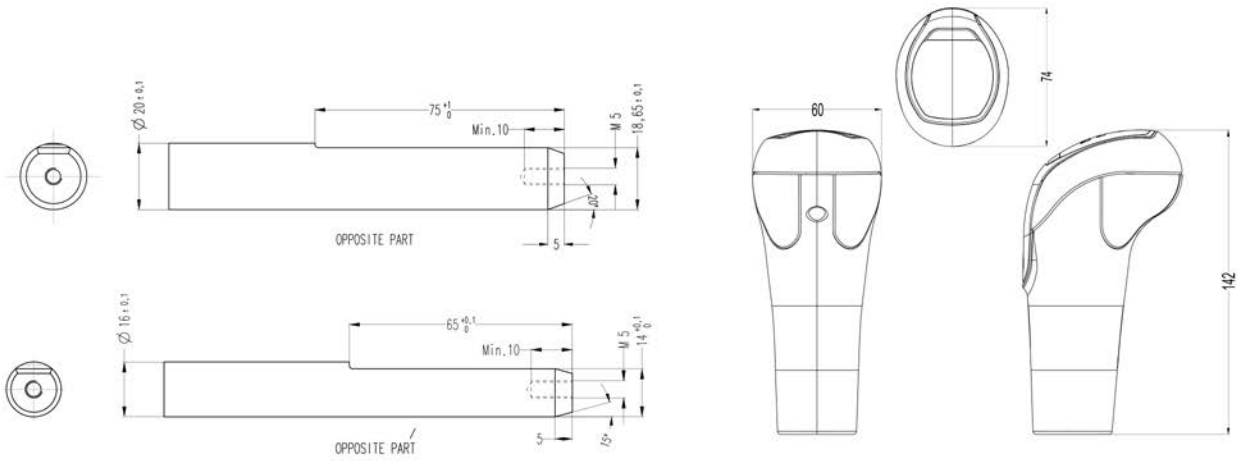
PARTS	PARTS NAME	PARTS NO
	MD KNOBS	0001.026X.XXX
	MD KNOBS SYMBOL ASSY	0001.0261.XXX
	MD KNOBS ASSY	0001.4013.XXX
	MD KNOBS LEFT SWITCH	0001.4013.XXX
	MD KNOBS RIGHT SWITCH	0001.4013.XXX
	MD KNOBS DOUBLE SWITCH	0001.4013.XXX